AKCESORIA DODATKOWE

KARTA PRODUKTU

WIRNIK STANDARD

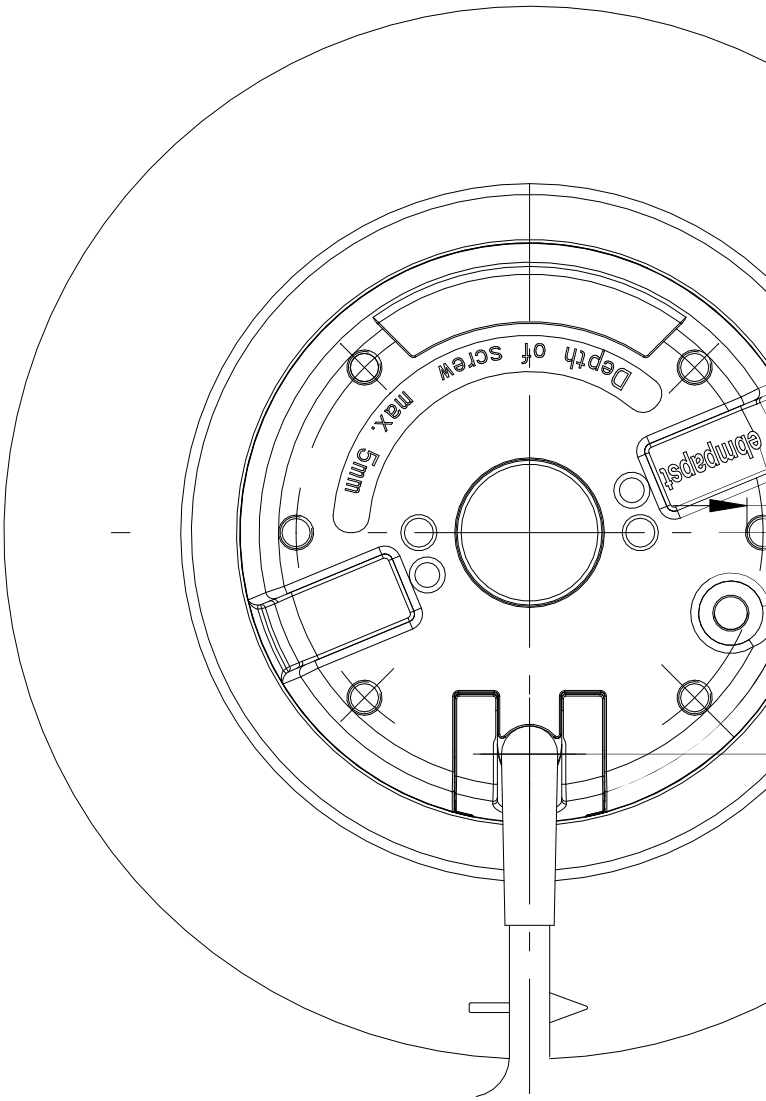

AKCESORIA DODATKOWE

WIRPLAST

AC centrifugal fan

backward curved

ebm-papst Mulfingen GmbH & Co. KG
Bachmühle 2 · D-74673 Mulfingen
Phone +49 7938 81-0
Fax +49 7938 81-110
info1@de.ebmpapst.com
www.ebmpapst.com

Limited partnership · Headquarters Mulfingen
County court Stuttgart · HRA 590344

General partner Elektrobau Mulfingen GmbH · Headquarters Mulfingen
County court Stuttgart · HRB 590142

Nominal data

Phase		1~	1~
Nominal voltage	VAC	230	230
Frequency	Hz	50	60
Type of data definition		fa	fa
Valid for approval / standard		CE	CE
Speed	min^{-1}	2800	3300
Power input	W	24	27
Current draw	A	0.11	0.13
Motor capacitor	µF	1	1
Capacitor voltage	VDB	400	400
Capacitor standard		P0 (CE)	P0 (CE)
Min. back pressure	Pa	0	0
Min. ambient temperature	°C	-25	-25
Max. ambient temperature	°C	45	60
Starting current	A	0.20	0.21

ml = max. load · me = max. efficiency · fa = running at free air · cs = customer specs · cu = customer unit
Subject to alterations

AKCESORIA DODATKOWE

AC centrifugal fan

backward curved

Technical features

Mass	0.7 kg
Size	133 mm
Surface of rotor	Partially cast in aluminium
Material of impeller	PA plastic 6, fiberglass-reinforced
Number of blades	7
Direction of rotation	Clockwise, seen on rotor
Type of protection	IP 44; Depending on installation and position
Insulation class	"B"
Max. permissible ambient motor temp. (transp./ storage)	+ 80 °C
Min. permissible ambient motor temp. (transp./storage)	- 40 °C
Mounting position	Any
Condensate discharge holes	None
Operation mode	S1
Motor bearing	Ball bearing
Touch current acc. IEC 60990 (measuring network Fig. 4, TN system)	< 0.75 mA
Motor protection	Thermal overload protector (TOP) wired internally
Cable exit	Variable
Protection class	I (if protective earth is connected by customer)
Product conforming to standard	CE
Approval	CCC; GOST

ebm-papst Mulfingen GmbH & Co. KG · Bachmühle 2 · D-74673 Mulfingen · Phone +49 (0) 7938 81-0 · Fax +49 (0) 7938 81-110 · info1@de.ebmpapst.com · www.ebmpapst.com

AKCESORIA DODATKOWE

AC centrifugal fan

backward curved

Product drawing

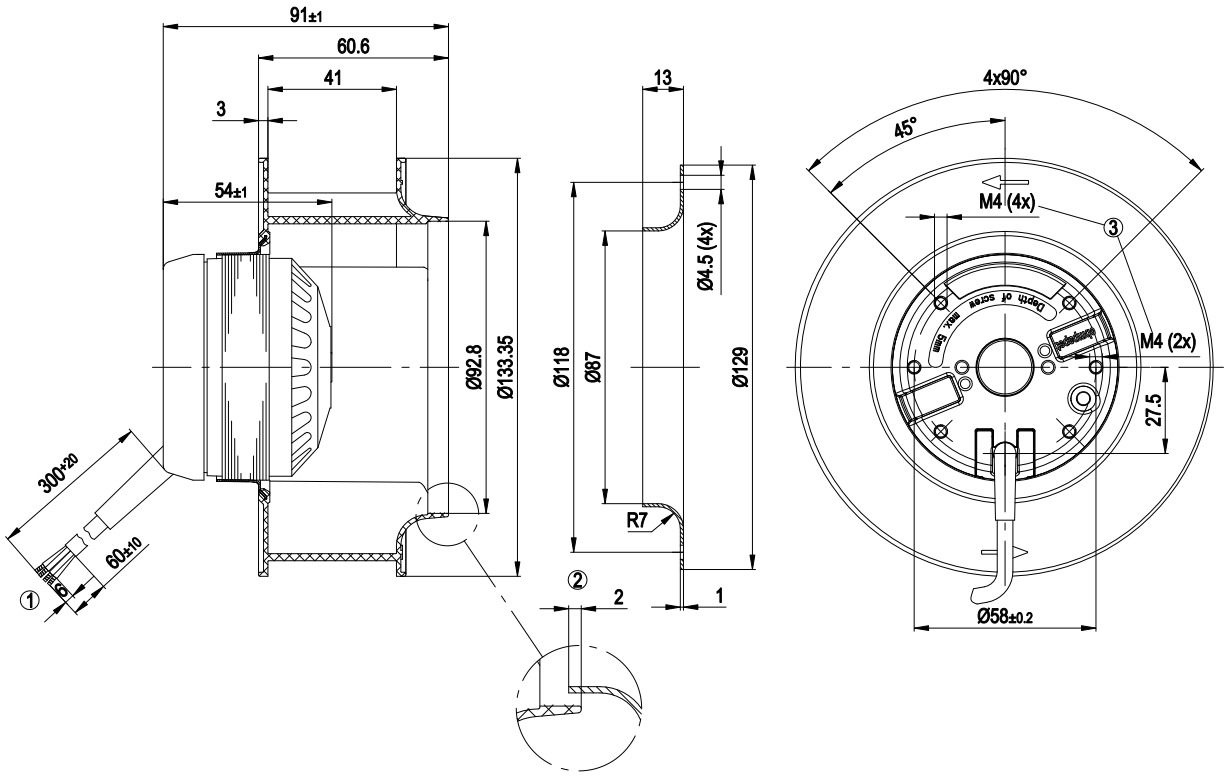

1	Connection line PVC, 4x brass lead tips crimped
2	Accessory part: Inlet nozzle 09566-2-4013, not included in the standard scope of delivery
3	Screw depth max. 5 mm

Connection screen

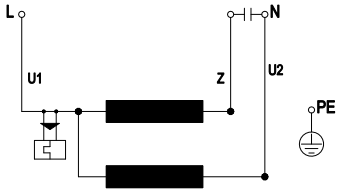

U1	blue	Z	brown	U2	black
PE	green/yellow				

ebm-papst Mulfingen GmbH & Co. KG · Bachmühle 2 · D-74673 Mulfingen · Phone +49 (0) 7938 81-0 · Fax +49 (0) 7938 81-110 · info1@de.ebmpapst.com · www.ebmpapst.com

AKCESORIA DODATKOWE

AC centrifugal fan

backward curved

Charts: Air flow 50 Hz

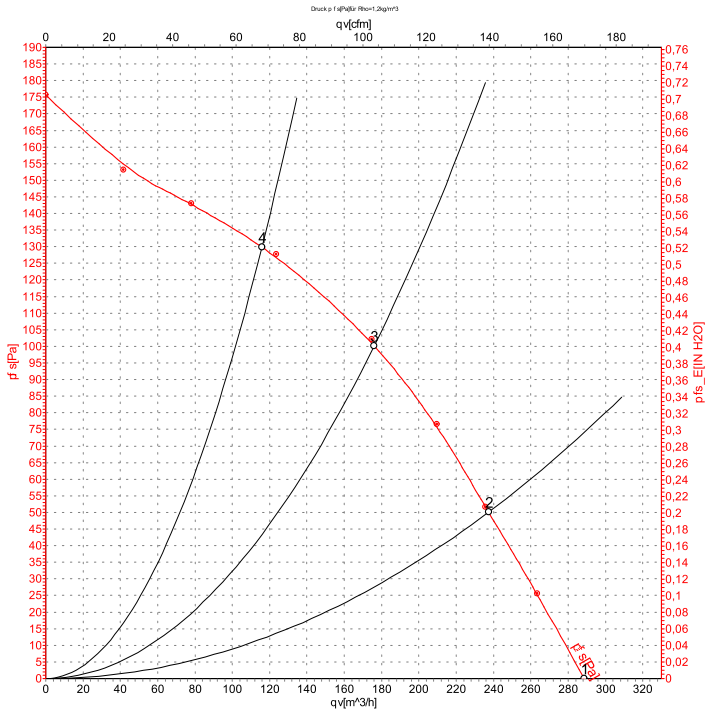

Measurement: LU-54086

Air performance measured as per ISO 5801 Installation category A. For detailed information on the measuring set-up, please contact ebm-papst. Suction-side noise levels: LwA measured as per ISO 13347 / LpA measured with 1m distance to fan axis. The values given are valid under the measuring conditions mentioned above and may vary according to the actual installation situation. With any deviation from the standard set-up, the specific values have to be checked and reviewed with the unit installed.

Measured values

	U	f	n	P_e	I	qv	p_{fs}
	V	Hz	min^{-1}	W	A	m^3/h	Pa
1	230	50	2800	24	0.11	290	0
2	230	50	2710	25	0.11	235	50
3	230	50	2700	26	0.11	175	100
4	230	50	2710	26	0.11	115	130

U = Supply voltage · f = Frequency · n = Speed · P_e = Power input · I = Current draw · qv = Air flow · p_{fs} = Pressure increase

ebm-papst Mulfingen GmbH & Co. KG · Bachmühle 2 · D-74673 Mulfingen · Phone +49 (0) 7938 81-0 · Fax +49 (0) 7938 81-110 · info1@de.ebmpapst.com · www.ebmpapst.com

AKCESORIA DODATKOWE

AC centrifugal fan

backward curved

Charts: Air flow 60 Hz

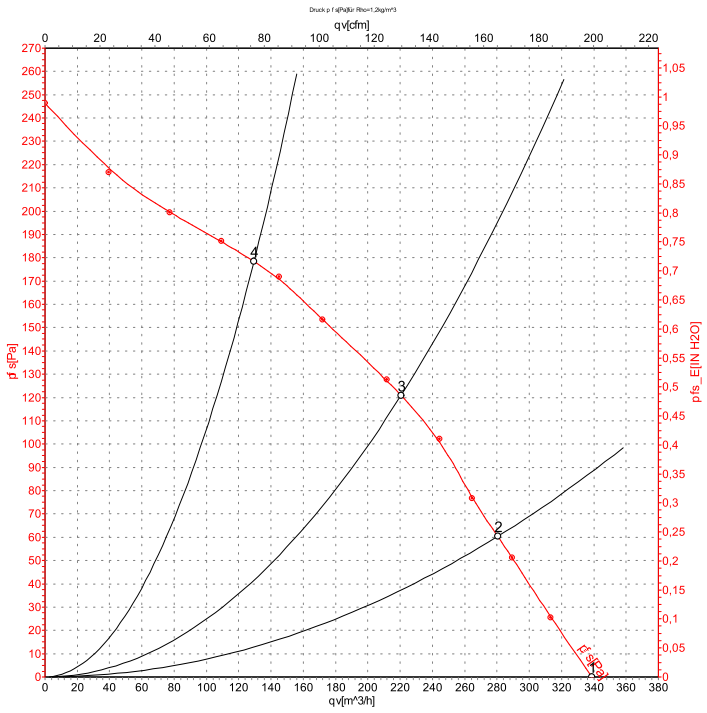

Measurement: LU-54087

Air performance measured as per ISO 5801 Installation category A. For detailed information on the measuring set-up, please contact ebm-papst. Suction-side noise levels: LwA measured as per ISO 13347 / LpA measured with 1m distance to fan axis. The values given are valid under the measuring conditions mentioned above and may vary according to the actual installation situation. With any deviation from the standard set-up, the specific values have to be checked and reviewed with the unit installed.

Measured values

	U	f	n	P_e	I	qv	p_{fs}
	V	Hz	min^{-1}	W	A	m^3/h	Pa
1	230	60	3300	27	0.13	340	0
2	230	60	3150	29	0.13	280	60
3	230	60	3125	29	0.13	220	120
4	230	60	3145	29	0.13	130	180

U = Supply voltage · f = Frequency · n = Speed · P_e = Power input · I = Current draw · qv = Air flow · p_{fs} = Pressure increase

ebm-papst Mulfingen GmbH & Co. KG · Bachmühle 2 · D-74673 Mulfingen · Phone +49 (0) 7938 81-0 · Fax +49 (0) 7938 81-110 · info1@de.ebmpapst.com · www.ebmpapst.com